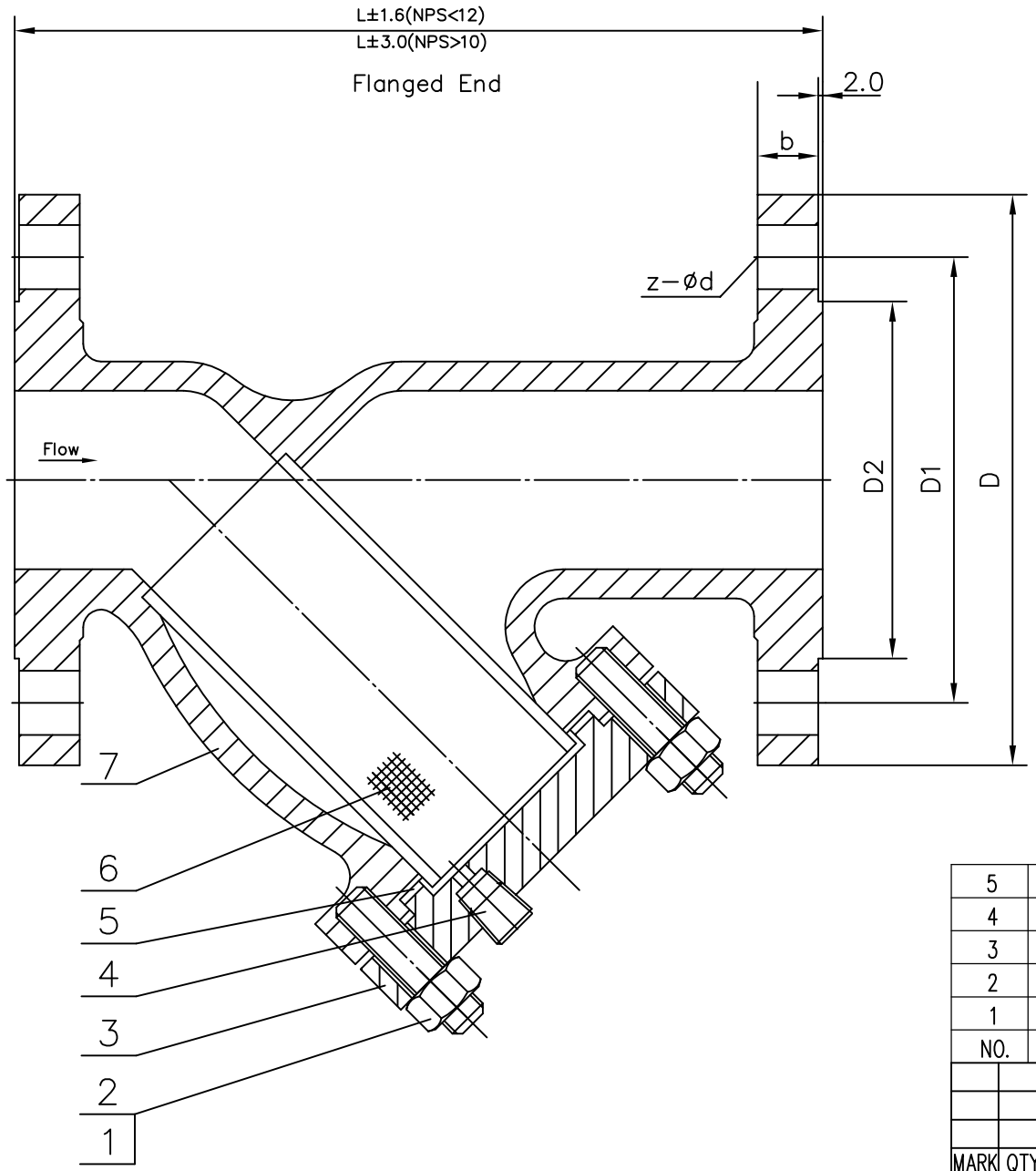


| | | | | | | |
|---|---|---|---|---|---|---|
| 10″ | 445 | 387.5 | 324 | 580 | 46.1 | 16-ø29 |
| 8″ | 380 | 330 | 270 | 485 | 39.7 | 12-ø25 |
| 6″ | 320 | 270 | 216 | 380 | 35 | 12-ø22 |
| 4″ | 255 | 200 | 157 | 295 | 30.2 | 8-ø22 |
| 3″ | 210 | 168 | 127 | 280 | 27 | 8-ø22 |
| 2″ | 165 | 127 | 92 | 215 | 20.7 | 8-ø19 |
| NPS | D | D1 | D2 | L | b | Z-d |

| Performance Specification | | | |
|---|---|---|---|
| Nominal Pressure | | 300LB | MPa |
| Test Pressure | Intensity test | 7.7 | |
| | Back seal test | / | |
| | Seal test | / | |
| | Gas test | / | |
| Working Temperature | | -29~425 | ℃ |
| Medium: water oil & gas | | | |

Technical Specification

1. Design and manufacture: ASME B 16.34
2. Face-to-face: Manufacturer's standard
3. Flanged ends: ASME B16.5
4. Inspection and test: API 598

| NO. | Name | Material | NO. | Name | Material |
|---|---|---|---|---|---|
| 5 | GASKET | SS304+GRAPHITE | | | |
| 4 | PLUG | SS | | | |
| 3 | COVER | WCB/CF8/CF8M | | | |
| 2 | Nut | A194 2H/8 | 7 | BODY | A216 WCB;CF8/CF8M |
| 1 | Bolt | A193 B7/B8 | 6 | SCREEN | SS304/SS316 |

| MARK | QTY | FILE NO. | SIGN | DATE |
|---|---|---|---|---|
| | | | | |
| | | | | |
| | | | | |

| | | | | |
|---|---|---|---|---|
| DESIGN | | | STANDARD | |
| CHECK | | | APPROVE | |
| TECHNOLOGY | | | | |

CLASS 150LB

ASSEMBLE DRAWING

Y STRAINER,RF FLANGED

| DRAW MARK | WT. | SCALE |
|---|---|---|
| | | |

DRAW REV.01

CX FLUID PRODUCTS MFG CO.,LTD.

Intervale 134

OFFER No.

CHECKED BY

PRINTED BY

OLD DRAWING NO.

BASED DRAWING NO.

SIGNATURE

DATE